CHAPTER

FOUR

Generic synthetic aperture ultrasound imaging

This chapter introduces synthetic aperture ultrasound imaging (SAU) in its "classical" form, the mono-static synthetic aperture imaging. Historically this modality appeared in the 1950s and was first applied in radar systems. A number of reconstruction algorithms have been developed. Some of them are carried out in frequency domain and are well suited for signal processing using optical elements [23]. This was done in the early years of synthetic aperture radar (SAR), when the limitations were imposed by the computational power available. Others reconstruction algorithms are executed in time domain and are computationally more expensive. They have been introduced in SAR in the recent years [33].

The synthetic aperture focusing in its mono-static form is described in [56], where the performance of the system is discussed. This approach is very suitable in the field of non-destructive testing (NDT), and a frequency based reconstruction was implemented by Mayer et al. in [57] and Busse in [58]. The group of O'Donnell has been using synthetic aperture focusing for intra-vascular imaging [59]. A substantial work in the field of SAU was done Ylitalo [60, 61, 62, 63, 64]. He and his colleagues have considered various geometries of the transducer and investigated the signal-to-noise ratio. They have also implemented a real-time system. Karaman and colleagues have studied the application of synthetic aperture focusing for a cheap ultrasound system [65]. Other groups have also applied synthetic aperture focusing to ultrasound [66, 67].

In the next section a simple model for synthetic aperture imaging is presented. Then some reconstruction methods are outlined and their performance in terms of lateral resolution and signal-to-noise ratio (SNR) is discussed.

4.1 Simple model

4.1.1 Acquisition

In the synthetic aperture imaging a single transducer element is used both, in transmit and receive as illustrated in Figure 4.1. Because of the small element size in the azimuth plane, the transmitted wave has a cylindrical wavefront. It propagates in the whole region of interest and the returned signal carries information from all imaging directions. All of the transducer elements are fired one by one. Every point of the examined tissue is viewed from different angles, and the received signals from the different elements have different phases for the same

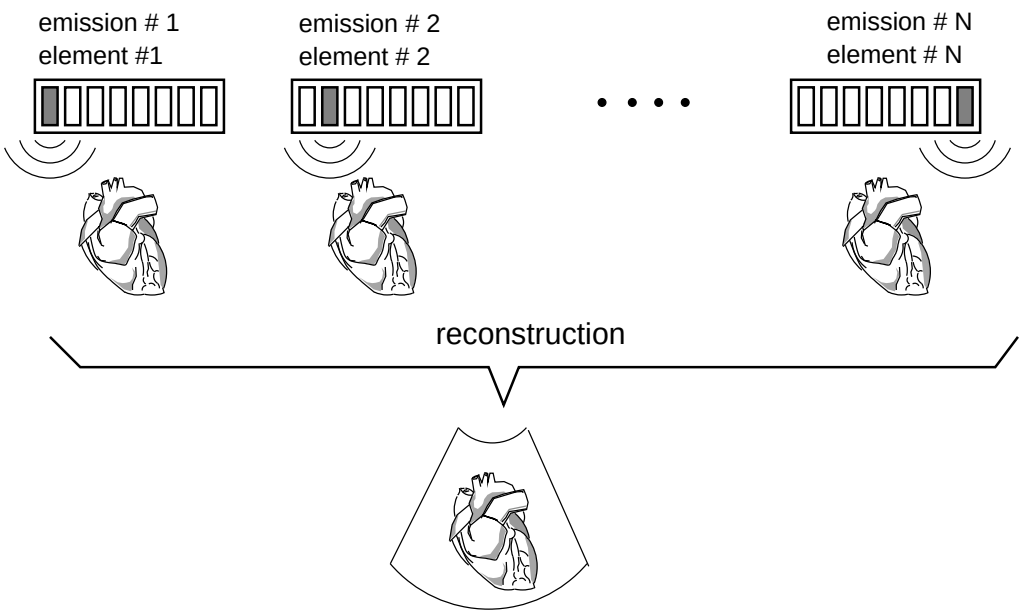

Figure 4.1: Simple model for acquiring synthetic aperture data.

spatial position. After the last emission the signals are processed (the phase information is extracted) and the image of the tissue is reconstructed.

4.1.2 The received signal

In the following some assumptions will be used to simplify the considerations. The region of investigation (the tissue below the transducer) will be a homogeneous, non-dispersive, non-attenuating medium. The electromechanical impulse response of the transducer is a Dirac delta function. Hence the transmitted pressure pulse $p(t)$, and the received signal $r(t)$, are proportional to the generated electrical radio frequency pulse $g(t)$.

Let the elements of a transducer be infinitesimal in the azimuth plane (point sources). The waves that they emit are, in this case, cylindrical. The height of the cylindrical wave is determined by the height of the transducer elements. The considerations can be confined only to the azimuth plane $(x-z)$, and the 2D measurement situation is depicted in Figure 4.2. Consider a point scatterer at spatial coordinates $\vec{x}_p = (x_p, z_p)$. The signal emitted by a transducer element i at coordinates $\vec{x}_i = (x_i, 0)$ propagates as a cylindrical wave. The wave front reaches the point scatterer which in turn becomes a source of a spherical wave. The back-scattered wavefront reaches the transmitting element i at a time instance:

$$\begin{aligned} t_p(\vec{x}_i) &= \frac{2}{c}|\vec{x}_p - \vec{x}_i| \\ t_p(\vec{x}_i) &= \frac{2}{c}\sqrt{z_p^2 + (x_i - x_p)^2}, \end{aligned} \tag{4.1}$$

where c is the speed of sound, and the time t_p is measured from the beginning of the emission.

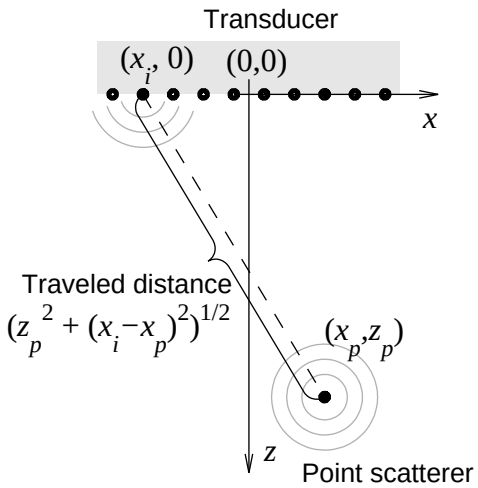

Figure 4.2: Illustration of the synthetic aperture geometry.

If the signal emitted by element i is $g(t)$, then the received signal can be expressed as:

$$r(t, x_i) = \sigma_p g\left(t - \frac{2\sqrt{z_p^2 + (x_i - x_p)^2}}{c}\right), \tag{4.2}$$

where σ_p is the back-scattering coefficient. Assuming that the tissue can be modeled as a collection of point scatterers, and applying Born's approximation (there is no secondary scattering), the signal received by element i becomes:

$$r(t, x_i) = \sum_p \sigma_p g\left(t - \frac{2\sqrt{z_p^2 + (x_i - x_p)^2}}{c}\right) \tag{4.3}$$

The Fourier transform of the generic SAU signal $r(t, x_i)$ with respect to time t is:

$$\dot{R}(\omega, x_i) = \dot{G}(\omega) \sum_p \sigma_p \exp\left(-j2k\sqrt{z_p^2 + (x_i - x_p)^2}\right), \tag{4.4}$$

where $k = \omega/c$ is the wavenumber. As one can see, the SAU signal in the (ω, x) domain is composed of a linear combination of the spherical phase-modulated (PM) signals, that is,

$$\exp\left(-j2k\sqrt{z_p^2 + (x_i - x_p)^2}\right) \tag{4.5}$$

The Fourier transform with respect to space of (4.4) is:

$$\dot{R}(\omega, k_x) = \dot{G}(\omega) \sum_p \sigma_p \underbrace{\exp\left(-j\sqrt{4k^2 - k_x^2} z_p - jk_x x_p\right)}_{\text{Linear phase function of } (z_p, x_p)}, \tag{4.6}$$

for $k_x \in [-2k, 2k]$. k_x is referred to as synthetic aperture frequency domain, or slow-time frequency domain. In the classical SAR imaging systems, from the 1950s, this variable was called the *slow-time Doppler* domain.

4.1.3 Reconstruction

The SAU signal can be rewritten in terms of two variables k_x and k_z:

$$\dot{R}(\omega, k_x) = \dot{G}(\omega) \sum_p \sigma_p \exp\left(-jk_z z_p - jk_x x_p\right), \tag{4.7}$$

where k_z is:

$$k_z = \sqrt{4k^2 - k_x^2}. \tag{4.8}$$

These two variables are also known as SAU *spatial frequency mapping* or *transformation*.

The *ideal* function of the medium is defined in the spatial domain via:

$$f_m(x,z) = \sum_p \sigma_p \delta(x - x_p, z - z_p) \tag{4.9}$$

This function has the following Fourier transform:

$$\dot{F}_m(k_z, k_x) = \underbrace{\sum_p \sigma_p \underbrace{\exp(-jk_z z_p - jk_x k_p)}_{\text{Linear phase function}}}_{\text{Linear combination}} \tag{4.10}$$

The SAU signal is then given by:

$$\dot{R}(\omega, k_x) = \dot{G}(\omega) \dot{F}_m(k_z, k_x), \tag{4.11}$$

where (k_z, k_x) are governed by the SAU spatial frequency mapping. For the reconstruction of $f_m(z,x)$ or $F_m(k_z, k_x)$ from the Fourier transform of the measured signal $R(\omega, k_x)$ one has:

$$\dot{F}_m(k_z, k_x) = \frac{\dot{R}(\omega, k_x)}{\dot{G}(\omega)}. \tag{4.12}$$

This is a theoretical reconstruction since $g(t)$ is usually band limited signal. Moreover $R(\omega, k_x)$ is zero for $|k_x| > 2k$. The practical reconstruction is by time matched filtering, that is:

$$\begin{aligned} \dot{F}_m(k_z, k_x) &= \dot{G}^*(\omega) \dot{R}(\omega, k_x) \\ &= |\dot{G}(\omega)|^2 \sum_p \sigma_p \exp(-jk_z z_p - jk_x x_p), \end{aligned} \tag{4.13}$$

for $k_x \in [-2k, 2k]$.

The reconstruction of the scatter map from the SAU domain signal can be done either in the (k_z, k_x) domain or in the time domain. Several reconstruction algorithms are known, such as reconstruction via spatial frequency interpolation, reconstruction via range stacking, or reconstruction via slow-time fast-time matched filtering. Because the computing power is not of concern in this study, a method known in the SAR systems as *back-projection algorithm*, or conversely ”delay and sum” will be considered in the following.

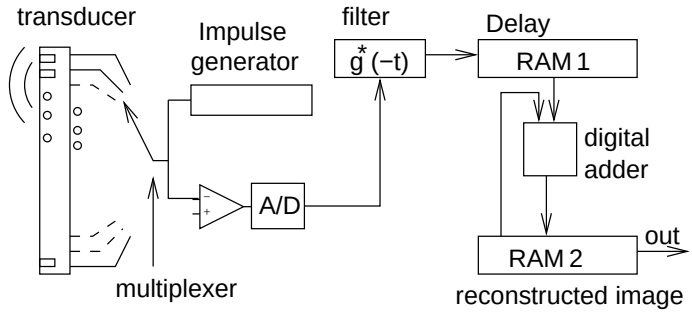

Figure 4.3: Simplified scheme of a synthetic aperture ultrasound system

4.1.4 Delay and sum reconstruction

As it was shown in the previous section, the received signal must be matched filtered in the time domain.

Figure 4.3 shows a simplified SAU system. The signal in receive is sampled and then fed into a matched-filter. The fast-time matched-filtered signal is denoted as:

$$r_m(t,x_i) = \mathrm{Re}\{\dot{r}(t,x_i) \underset{t}{*} \dot{g}^*(-t)\}, \tag{4.14}$$

where $\underset{t}{*}$ denotes convolution in time. The fast-time matched-filtered signal is then stored into a random access memory - RAM 1. From there the samples at the right times are read by a digital adder. The target function at coordinates (z_p, x_p) is then reconstructed by:

$$\begin{aligned} \hat{f}_m(z_p,x_p) &= \sum_i r_m \left(\frac{2\sqrt{z_p^2 + (x_p - x_i)^2}}{c}, x_i \right) \\ &= \sum_i r_m \left(t_p(x_i), x_i \right) \end{aligned} \tag{4.15}$$

where

$$t_p(x_i) = \frac{2\sqrt{z_p^2 + (x_p - x_i)^2}}{c} \tag{4.16}$$

is the round trip delay of the echoed signal to the point scatterer at (x_p, z_p) when the transducer element is at coordinates $(x_i, 0)$. Thus, to form the target function at a given point (x_p, z_p) in the spatial domain, one can coherently add the data at the fast-time samples that corresponds to the location of that point for all elements located at coordinates $(x_i, 0)$.

Usually the samples are interpolated for the right time instances $t_p(x_i)$. If this step is skipped, valuable high-resolution information is lost.

The reconstructed signal is not yet ready for display. It must be further envelope detected, logarithmically compressed, and then sent to the display.

4.2 Performance

The performance of the method will be evaluated in terms of resolution, frame rate and signal to noise ratio.

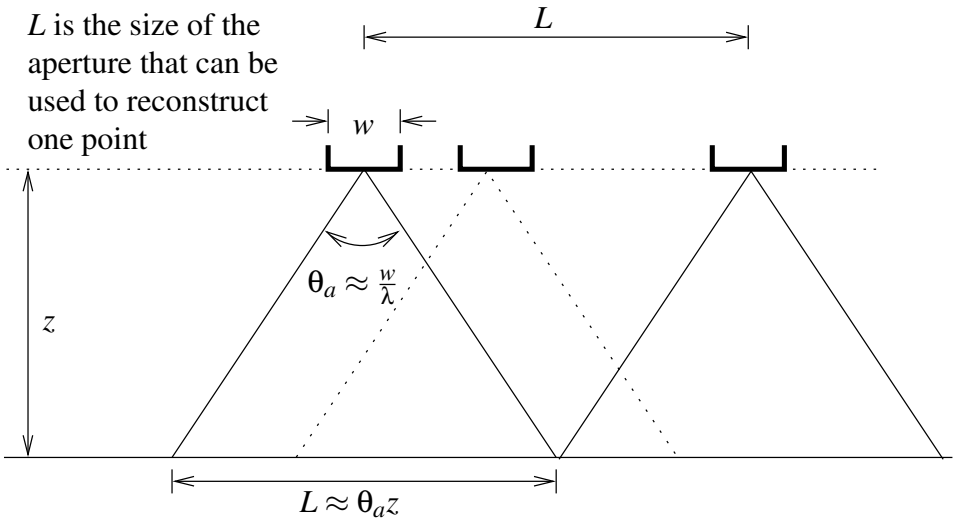

Figure 4.4: Illustration of the influence of the element size on the useful aperture. The bigger the width of a single transducer element, the narrower is the beam. The width of the beam determines the width of the useful aperture.

4.2.1 Resolution

Generally the resolution of a system is estimated by its bandwidth. In this case the spatial resolution of the system is estimated by its spatial bandwidth. Remember the frequency representation of the synthetic aperture signal:

$$\dot{R}(\omega, k_x) = \dot{G}(\omega) \sum_p \sigma_p \exp\left(-jk_z z_p - jk_x x_p\right). \tag{4.17}$$

The above signal implies that the array is composed of point-like transducer elements that span $x_i \in (-\infty, \infty)$. The bandwidth is then determined by:

$$k_x \in [-2k, 2k], \tag{4.18}$$

where $k = 2\pi/\lambda$ is the wavenumber. The *theoretical* maximum spatial resolution is given by [33] :

$$\delta_x = \frac{\pi}{2k} \tag{4.19}$$

$$\boxed{\delta_x = \frac{\lambda}{4}} \tag{4.20}$$

There are however practical limitations to the above equation: (1) the elements are not infinitely narrow, and (2) the array is not infinitely large. Let's consider these factors one by one.

Influence of the finite element size

The finite element size in the azimuth direction imposes a general limitation on the maximum size of the aperture. Consider Figure 4.4. The transducer elements are usually planar, and have small width w. Because of their small width it is possible to state that the imaged points are in

the far field of the transducer elements. The far field is characterized by a divergence angle θ_a [21] which for a planar radiator is:

$$\theta_a \approx 2 \arcsin \frac{w}{2\lambda} \approx \frac{w}{\lambda}. \tag{4.21}$$

The beamwidth at a given distance z is then determined by [68]:

$$L = 2z \sin \theta_a \approx z \frac{w}{\lambda}, \tag{4.22}$$

which gives a spatial resolution of;

$$\delta_x \leq \frac{w}{2} \tag{4.23}$$

It can be seen that the resolution is depth-independent, provided that the number of transducer elements is infinite, and that there are enough elements to form the aperture for every depth. Usually the element width for phased arrays is $w = \lambda/2$, giving a maximum resolution of $\delta_x = \lambda/2$, which was shown to be also the case for infinitely small elements. The practical limitation for the resolution of a real-life SAU system is therefore not imposed by the element width.

Influence of the finite aperture size

Far more important is the influence of the finite aperture size. Let's consider the radiation pattern of a SAU system. Neglecting the discrete nature of the synthesized aperture [56], the transfer function of the synthetic aperture imaging can be written as:

$$\mathsf{A}_{t/r\ \mathrm{SAU}}(x) = L \frac{\sin\left(kL\frac{x}{z}\right)}{kL\frac{x}{z}}, \tag{4.24}$$

where L is the length of the synthesized aperture, and z is the axial distance at which the point-spread-function is derived. Letting $kL\frac{x}{z} = \zeta$ one gets:

$$\mathsf{A}_{t/r\ \mathrm{SAU}}(\zeta) = L \frac{\sin \zeta}{\zeta} \tag{4.25}$$

A suitable level to search for the resolution δ_x is $2/\pi$, which corresponds to a level -4 dB from the maximum. This level is chosen because is it is easy to find an analytic solution for the resolution. The above equation gets the solution:

$$\frac{\mathsf{A}_{t/r\ \mathrm{SAU}}(\zeta)}{\mathsf{A}_{t/r\ \mathrm{SAU}}(0)} = \frac{\pi}{2} \tag{4.26}$$

$$\mathsf{A}_{t/r\ \mathrm{SAU}}(0) = L \tag{4.27}$$

$$\frac{\sin(\zeta)}{\zeta} = \frac{2}{\pi} \tag{4.28}$$

If ζ is let to be:

$$\zeta = \frac{\pi}{2} = \zeta_0, \tag{4.29}$$

then $\sin \zeta_0 \equiv 1$, and the following equation is valid:

$$\frac{\sin \zeta_0}{\zeta_0} = \frac{\sin \frac{\pi}{2}}{\frac{\pi}{2}} \equiv \frac{2}{\pi}. \tag{4.30}$$

So the -4 dB resolution in the azimuth plane is found when $\zeta_0 = \frac{\pi}{2}$. Going back to the substitution one gets:

$$\frac{\pi}{2} = kL\frac{x_0}{z} \tag{4.31}$$

$$x_0 = \frac{z\pi}{2Lk} \tag{4.32}$$

The beamwidth is twice the distance at which the beam gets the respective level:

$$\delta_{x4\text{dB}} = 2x_0 = \frac{z\pi}{kL}. \tag{4.33}$$

The beamwidth at a different level can be found using some numerical method. It can be seen that the lateral resolution δ_x is proportional to the axial distance z. It is therefore convenient to express the point spread function as a function of the angle $\theta = \arcsin\frac{x}{z}$. In this case:

$$\delta_\theta = 2\arcsin\frac{\delta_x}{2z} \tag{4.34}$$

$$\delta_{\theta 4\text{dB}} = 2\arcsin\frac{\pi}{2Lk}. \tag{4.35}$$

The angular resolution is depth independent for the case of synthetic aperture imaging.

Consider the discrete nature of the synthetic aperture, and let the number of elements in the system be N_{xdc}, and the signal received by element i be r_i.

The reconstructed image is:

$$\hat{f}_m(t,\vec{x}_p) = \sum_{i=1}^{N_{xdc}} r_i(t - 2\frac{|\vec{x}_p - \vec{x}_i|}{c}). \tag{4.36}$$

Using the Fourier relation between the radiation pattern of a single element in its far field, and substituting $\vec{x}_p$ with a spherical coordinate system one gets the angular point spread function of the system. It is in this case given by [56, 65, 68]:

$$\mathsf{A}_{t/r\ \text{SAU};\delta}(\theta) = \frac{\sin(kN_{xdc}d_x\sin\theta)}{\sin(kd_x\sin\theta)}, \tag{4.37}$$

where

$$\theta = \arcsin\frac{z}{x} \tag{4.38}$$

is the angle between the scan-line and the normal vector to the transducer surface. The distance between the centers of two elements (the transducer pitch) is d_x. This function repeats itself with a period which is equal to:

$$\begin{aligned} \pi &= kd_x\sin(\theta) \\ \sin\theta &= \frac{\pi}{kd_x} = \frac{\lambda}{2d_x} \end{aligned} \tag{4.39}$$

The replicas of the main lobe are known as grating lobes. Equation (4.37) does not take into consideration the size of the transducer element, only the finite size and the discrete nature of the aperture.

Comparing it with the two-way radiation pattern of a phased array [24]:

$$\mathsf{A}_{t/r\ \mathrm{ph};\delta}(\theta) = \frac{\sin^2\left(\frac{k}{2}N_{xdc}d_x\sin\theta\right)}{\sin^2\left(\frac{k}{2}d_x\sin\theta\right)}, \tag{4.40}$$

one notices:

- The resolution of a SAU system is bigger than the one of a phased array system for the same number of elements.
- The side-lobe level of a phased array system is lower than that of a SAU system.
- The grating lobes (the repetition of the PSF) appear closer to the main lobe for a SAU system. To push the grating lobes outside the visible region, the pitch of the array for a phased array system must be $\lambda/2$, while for a SAU system it must be $\lambda/4$.

The information necessary to reconstruct the image is carried by the phase *difference* of the received signals by two adjacent elements (in the SAR systems this is known as the slow-time Doppler frequency). When focusing is applied in transmit, at the focal point the wavefront is approximately a plane wave. The signal is scattered back by two neighboring scatterers at the same depth at the same time. The difference of the phase returned by two point scatterers at the focal depth is therefore created on the way back to the transducer. The difference between the phases of the signals received by two elements in a SAU system is based on the two-way propagation and the two scatterers are easier to distinguish based on the measured phase difference[1].

The side lobe level of the SAU system is higher because the amplification at the focal point is determined only by the sum of N_{xdc} channels. In a phased array system, this is a double sum - once for the focusing in transmit and once for the focusing in receive. This means that a normal phased array system will display better the dark regions such as cysts, while the SAU system will display better the strong reflectors.

The combined influence of the element and aperture size

The easiest way to demonstrate the combined influence of the finite aperture and element size is through the k-space representation of the system. In the following only the lateral spatial frequencies will be considered. Figure 4.5 shows how the k-space is built for the cases of phased array and synthetic aperture imaging. Both arrays consist of 5 elements. The phased array system can be represented [54] as a small rectangle convolved with a comb function the length of the array. The aperture function becomes:

$$a_{\mathrm{III};\delta}(x) = \sum_{n=1}^{N_{xdc}} \delta(x - d_x n - \frac{N_{xdc}+1}{2}d_x) \tag{4.41}$$

$$a_{\mathrm{el}}(x) = \begin{cases} 1 & -\frac{w}{2} \le x \le \frac{w}{2} \\ 0 & \text{otherwise} \end{cases} \tag{4.42}$$

$$a_{t\ \mathrm{ph}}(x) = a_{r\ \mathrm{ph}}(x) = a_{\mathrm{el}}(x) \underset{x}{*} a_{\mathrm{III};\delta}(x) \tag{4.43}$$

[1]The lower resolution of a phased array system is determined by the way the information is processed. After all the information is gathered from the same spatial positions.

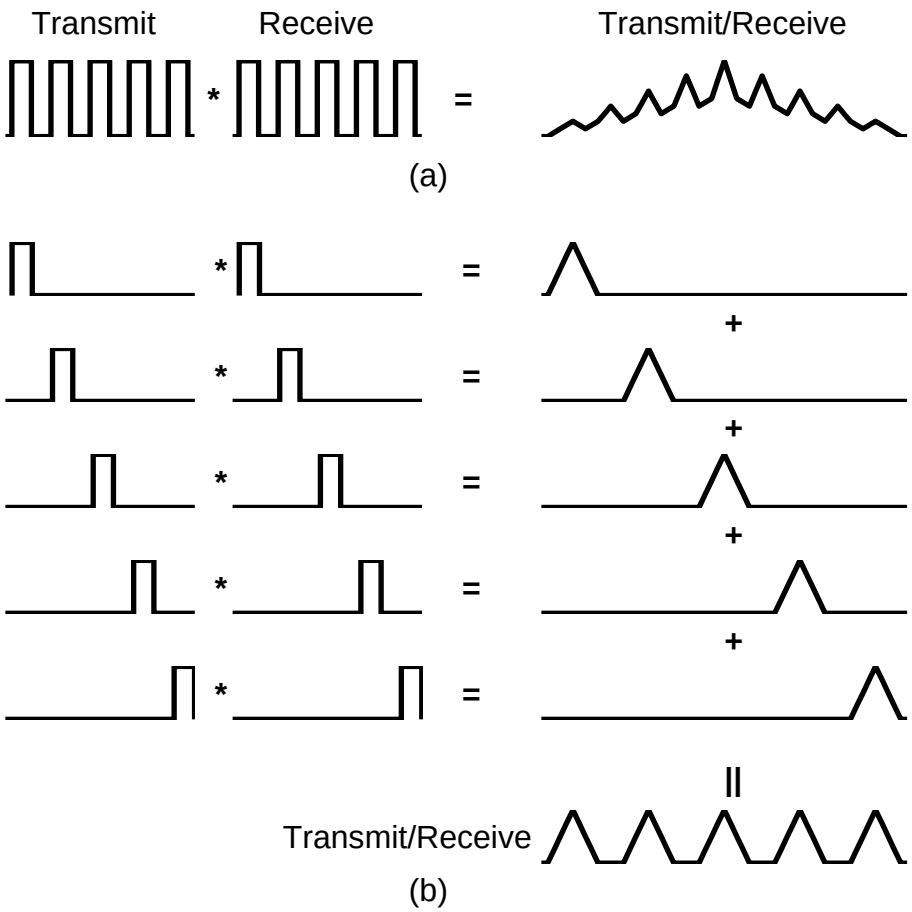

Figure 4.5: Filling in the k-space for (a) phased array imaging, and (b) synthetic aperture imaging.

where $a_{\mathrm{el}}(x)$ is the function describing the finite element size. The lateral k-space representation of the system is equal to the aperture function. The two way k-space representation of the phased array system is the convolution between the transmit and receive aperture functions,

$$a_{t/r\ \mathrm{ph}}(x) = a_t(x) \underset{x}{*} a_r(x) \tag{4.44}$$

$$a_{t/r\ \mathrm{ph}}(x) = a_{\mathrm{III};\delta}(x) \underset{x}{*} a_{\mathrm{III};\delta}(x) \underset{x}{*} a_{\mathrm{el}} \underset{x}{*} a_{\mathrm{el}}(x) \tag{4.45}$$

This operation is shown in Figure 4.5.

The two-way k-space representation of a phased array system consisting of point-like elements is $a_{\mathrm{ph};\delta} = a_{\mathrm{III};\delta} * a_{\mathrm{III};\delta}$, and is related to $\mathsf{A}_{t/r\ \mathrm{ph};\delta}(x)$ through the Fourier transform. It is a digital squared sinc function whose period is determined by the transducer pitch d_x. The width of the function is inversely proportional to the size of the array. This function is plotted in Figure 4.6(a). The pulse-echo response of a single element with width w is:

$$\mathsf{A}_{t/r\ \mathrm{el}}(\theta) = \left(\frac{\sin\left(\frac{k}{2} w \sin\theta\right)}{\frac{k}{2}\sin\theta} \right)^2 . \tag{4.46}$$

Due to the Fourier properties of the convolution the resulting point spread function of the phased array system is given by:

$$\mathsf{A}_{t/r\ \mathrm{ph}}(\theta) = \mathsf{A}_{t/r\mathrm{ph};\delta}(\theta) \cdot \mathsf{A}_{t/r\ \mathrm{el}}(\theta) \tag{4.47}$$

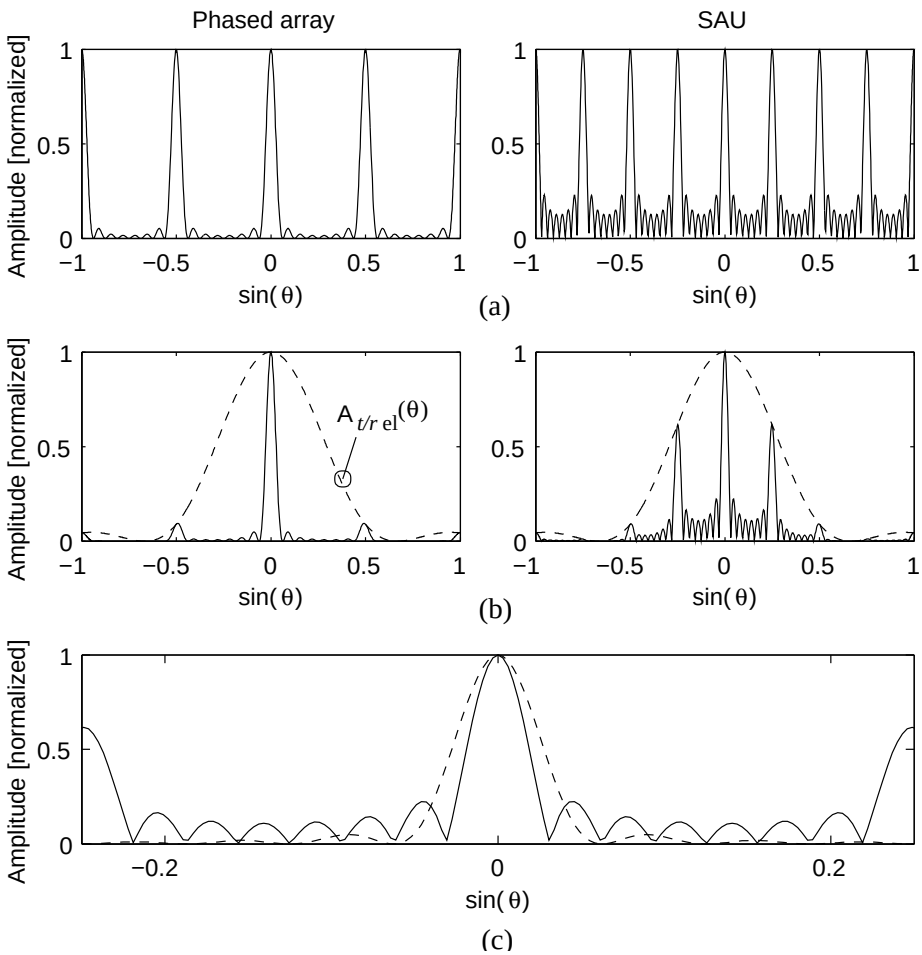

Figure 4.6: Creating the two-way radiation pattern. Sub-plot (a) shows the radiation pattern when the elements are δ functions, and (b) when the elements have finite size. Sub-plot (c) shows a comparison between the radiation patterns of a phased array imaging (dashed) and of a synthetic aperture imaging. The distance between the elements d_x is $d_x = 2\lambda$, and the width of the elements is $w = 1.5\lambda$

and is shown in Figure 4.6(b).

In synthetic aperture imaging the transmission and reception are performed only by a single element. The radiation pattern for the transmit element n is given by:

$$a_{n\ r\ \mathrm{SAU}}(x) = a_{n\ t\ \mathrm{SAU}}(x) = a_{\mathrm{el}} * \delta(x - d_x n - \frac{N_{xdc}+1}{2} d_x). \tag{4.48}$$

The transmit receive radiation pattern is then:

$$a_{n\ t/r\ \mathrm{SAU}}(x) = \underbrace{a_{\mathrm{el}}(x) \underset{x}{*} a_{\mathrm{el}}(x)}_{=a_{t/r\ \mathrm{el}}(x)} \underset{x}{*} \delta\left(x - 2(d_x n - \frac{N_{xdc}+1}{2} d_x)\right). \tag{4.49}$$

Because the system is linear, the k-space representation of the final image is the sum of the

k-space representations of each of the emissions:

$$a_{t/r\ \mathrm{SAU}}(x) = \sum_{n=1}^{N_{xdc}} a_{t/r\ \mathrm{el}}(x) \underset{x}{*} \delta\left(x - 2(d_x n - \frac{N_{xdc}+1}{2} d_x)\right) \tag{4.50}$$

$$a_{t/r\ \mathrm{SAU}}(x) = a_{t/r\ \mathrm{el}}(x) \underset{x}{*} \sum_{n=1}^{N_{xdc}} \delta\left(x - 2(d_x n - \frac{N_{xdc}+1}{2} d_x)\right). \tag{4.51}$$

The radiation pattern $\mathsf{A}_{\mathrm{SAU};\delta}$ of the sum of delta functions is given by (4.37) and is plotted in Figure 4.6(a). Using the properties of the Fourier integral, the two way radiation pattern becomes:

$$\mathsf{A}_{t/r\ \mathrm{SAU}}(\theta) = \mathsf{A}_{t/r\ \mathrm{el}}(\theta) \cdot \mathsf{A}_{t/r\ \mathrm{SAU};\delta}(\theta). \tag{4.52}$$

The transmit-receive radiation pattern of the array is weighted with the radiation pattern of the single element. This operation is shown in Figure 4.6(b).

Generally the size of the transducer element decreases the levels of the grating and side lobes, giving a higher contrast resolution in the system.

4.2.2 Frame rate

The frame rate of a synthetic aperture ultrasound system is given by:

$$f_{fr\ \mathrm{SAU}} = \frac{f_{prf}}{N_{\mathrm{firings}}}, \tag{4.53}$$

where f_{prf} is the pulse repetition frequency and N_{firings} is the number of emissions necessary to acquire the data for a single frame. Because the acquisition is done using the transducers elements in transmit and receive one by one, the number of firings is equal to the number of transducer elements, i.e.:

$$N_{\mathrm{firings}} = N_{xdc}. \tag{4.54}$$

The frame rate then is:

$$f_{fr\ \mathrm{SAU}} = \frac{f_{prf}}{N_{xdc}}. \tag{4.55}$$

For a phased array the frame rate is determined by the number of lines N_l in the image and is:

$$f_{fr\ \mathrm{ph}} = \frac{f_{prf}}{N_l} \tag{4.56}$$

The number of lines in an image is determined by the lateral resolution of the system. For a phased array system one can use the approximate formula [65]:

$$N_l \geq 1.5 N_{xdc} \tag{4.57}$$

The frame rate for a phased array system becomes:

$$f_{fr\ \mathrm{ph}} = \frac{f_{prf}}{1.5 N_{xdc}} \tag{4.58}$$

Comparing the frame rates for phased array imaging and synthetic array imaging, one notices the higher frame-rate of synthetic array imaging, which for the same number of elements is:

$$\frac{f_{fr\ \mathrm{SAU}}}{f_{fr\ \mathrm{ph}}} \geq 1.5 \tag{4.59}$$

There exists a catch. Each of the lines in the phased array imaging is beamformed after a single emission. The influence of tissue motion is in this case virtually non-existent. The information necessary to beamform the same line for synthetic array imaging is gathered for a time span N_{xdc}/f_{prf}. In this case the tissue motion can be substantial, impeding the coherent summation of the RF data. This can be overcome by using motion compensation. Motion compensation strategies will be discussed in Chapter 12

4.2.3 Signal-to-noise ratio

The signal-to-noise ratio depends in general on the transmitted energy into the tissue. What we are concerned here is the *gain* in the signal-to-noise ratio of the beamformed signal, compared to the signal-to-noise ratio of a single received signal. The gain in the signal-to-noise ratio is defined as:

$$GSNR = 10\log_{10}\frac{SNR}{SNR_0}, \tag{4.60}$$

where SNR_0 is the signal-to-noise ratio of a single element. For a synthetic array aperture this ratio is given by

$$GSNR = 10\log_{10} N_{xdc}, \tag{4.61}$$

where N_{xdc} is the number of elements in the array.